Maxwell Bridge Theory:

Maxwell Bridge theory, shown in Fig. 11.21, measures an unknown inductance in terms of a known capacitor. The use of standard arm offers the advantage of compactness and easy shielding. The capacitor is almost a loss-less component. One arm has a resistance R_1 in parallel with C_1, and hence it is easier to write the balance equation using the admittance of arm 1 instead of the impedance.

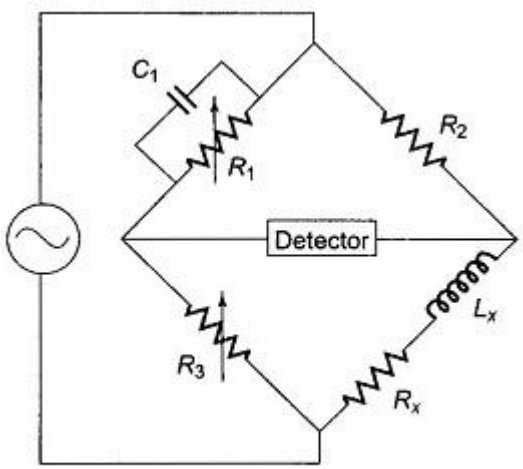

Fig. 11.21 Maxwell's Bridge

The general equation for bridge balance is

$$Z_1 Z_x = Z_2 Z_3$$

i.e.

$$Z_x = \frac{Z_2 Z_3}{Z_1} = Z_2 Z_3 Y_1 \qquad (11.14)$$

where

$$Z_1 = R_1 \text{ in parallel with } C_1 \text{ i.e. } Y_1 = \frac{1}{Z_1}$$

$$Y_1 = \frac{1}{R_1} + j\omega C_1$$

$$Z_2 = R_2$$

$$Z_3 = R_3$$

$$Z_x = R_x \text{ in series with } L_x = R_x + j\omega L_x$$

From Eq. (11.14) we have

$$R_x + j\omega L_x = R_2 R_3 \left(\frac{1}{R_1} + j\omega C_1 \right)$$

$$R_x + j\omega L_x = \frac{R_2 R_3}{R_1} + j\omega C_1 R_2 R_3$$

Equating real terms and imaginary terms we have

$$R_x = \frac{R_2 R_3}{R_1} \text{ and } L_x = C_1 R_2 R_3 \qquad (11.15)$$

Also

$$Q = \frac{\omega L_x}{R_x} = \frac{\omega C_1 R_2 R_3 \times R_1}{R_2 R_3} = \omega C_1 R_1$$

Maxwell Bridge Theory is limited to the measurement of low Q values (1 – 10). The measurement is independent of the excitation frequency. The scale of the resistance can be calibrated to read inductance directly.

Advantages and Disadvantages:

The Maxwell bridge using a fixed capacitor has the disadvantage that there is an interaction between the resistance and reactance

balances. This can be avoided by varying the capacitances, instead of R_2 and R_3, to obtain a reactance balance. However, the bridge can be made to read directly in Q.

The bridge is particularly suited for inductances measurements, since comparison with a capacitor is more ideal than with another inductance. Commercial bridges measure from 1 – 1000 H, with ± 2% error. (If the Q is very large, R_1 becomes excessively large and it is impractical to obtain a satisfactory variable standard resistance in the range of values required).

Hays Bridge Circuit:

Hays Bridge Circuit, shown in Fig. 11.23, differs from Maxwell's bridge by having a resistance R_1 in series with a standard capacitor C_1 instead of a parallel. For large phase angles, R_1 needs to be low; therefore, this bridge is more convenient for measuring high-Q coils. For Q = 10, the error is ± 1%, and for Q = 30, the error is ± 0.1%. Hence Hay's bridge is preferred for coils with a high Q, and Maxwell's bridge for coils with a low Q.

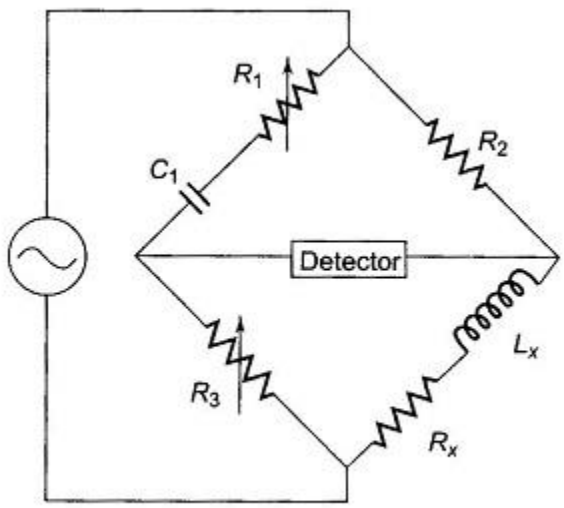

Fig. 11.23 Hay's Bridge

At balance

$$Z_1 Z_x = Z_2 Z_3, \text{ where}$$

$$Z_1 = R_1 - j/\omega C_1$$

$$Z_2 = R_2$$

$$Z_3 = R_3$$

$$Z_x = R_x + j\omega L_x$$

Substituting these values in the balance equation we get

$$\left(R_1 - \frac{j}{\omega c_1}\right)(R_x + j\omega L_x) = R_2 R_3$$

$$R_1 R_x + \frac{L_x}{C_1} - \frac{j R_x}{\omega C_1} + j\omega L_x R_1 = R_2 R_3$$

Equating the real and imaginary terms we have

$$R_1 R_x + \frac{L_x}{C_1} = R_2 R_3 \qquad (11.16)$$

and

$$\frac{R_x}{\omega C_1} = \omega L_x R_1 \qquad (11.17)$$

Solving for L_x and R_x we have, $R_x = \omega^2 L_x C_1 R_1$.

Substituting for R_x in Eq. (11.16)

$$R_1 (\omega^2 R_1 C_1 L_x) + \frac{L_x}{C_1} = R_2 R_3$$

$$\omega^2 R_1^2 C_1 L_x + \frac{L_x}{C_1} = R_2 R_3$$

Multiplying both sides by C_1 we get

$$\omega^2 R_1^2 C_1^2 L_x + L_x = R_2 R_3 C_1$$

Therefore,

$$L_x = \frac{R_2 R_3 C_1}{1 + \omega^2 R_1^2 C_1^2} \qquad (11.18)$$

Substituting for L_x in Eq. (11.17)

$$R_x = \frac{\omega^2 C_1^2 R_1 R_2 R_3}{1 + \omega^2 R_1^2 C_1^2} \qquad (11.19)$$

The term ω appears in the expression for both L_x and R_x. This indicates that the bridge is frequency sensitive.

The Hays Bridge Circuit is also used in the measurement of incremental inductance. The inductance balance equation depends on the losses of the inductor (or Q) and also on the operating frequency.

An inconvenient feature of this bridge is that the equation giving the balance condition for inductance, contains the multiplier 1/(1 +

$1/Q^2$). The inductance balance thus depends on its Q and frequency.

Therefore,

$$L_x = \frac{R_2 R_3 C_1}{1 + (1/Q)^2}$$

For a value of Q greater than 10, the term $1/Q^2$ will be smaller than 1/100 and can be therefore neglected.

Therefore $L_x = R_2R_3C_1$, which is the same as Maxwell's equation. But for inductors with a Q less than 10, the $1/Q^2$ term cannot be neglected. Hence this bridge is not suited for measurements of coils having Q less than 10. A commercial bridge measure from 1 μ H – 100 H with ± 2% error.

Measurement of Capacitance using Schering Bridge:

A very important bridge used for the precision measurement of capacitors and their insulating properties is the Schering Bridge Experiment. Schering Bridge basic circuit arrangement is given in Fig. 11.25. The standard capacitor C_3 is a high quality mica capacitor (low-loss) for general measurements, or an air capacitor (having a very stable value and a very small electric field) for insulation measurement.

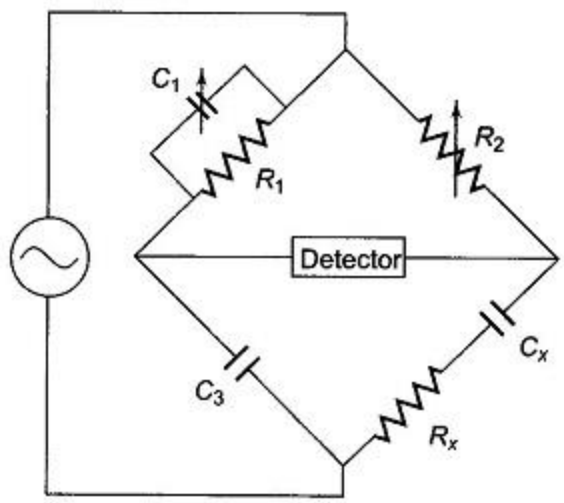

Fig. 11.25 Schering's Bridge

For balance, the general equation is

$$Z_1 Z_x = Z_2 Z_3 \qquad \therefore Z_x = \frac{Z_2 Z_3}{Z_1}, Z_x = Z_2 Z_3 Y_1$$

where

$$Z_x = R_x - j/\omega C_x$$

$$Z_2 = R_2$$

$$Z_3 = -j/\omega C_3$$

$$Y_1 = 1/R_1 + j\,\omega C_1$$

as

$$Z_x = Z_2 Z_3 Y_1$$

$$\therefore \quad \left(R_x - \frac{j}{\omega C_x}\right) = R_2\left(\frac{-j}{\omega C_3}\right) \times \left(\frac{1}{R_1} + j\omega C_1\right)$$

$$\left(R_x - \frac{j}{\omega C_x}\right) = \frac{R_2(-j)}{R_1(\omega C_3)} + \frac{R_2 C_1}{C_3}$$

Equating the real and imaginary terms, we get

$$R_x = \frac{R_2 C_1}{C_3} \qquad [11.20(a)]$$

and

$$C_x = \frac{R_1}{R_2} C_3 \qquad [11.20(b)]$$

The dial of capacitor C_1 can be calibrated directly to give the dissipation factor at a particular frequency.
The dissipation factor D of a series RC circuit is defined as the contangent of the phase angle.

$$D = \frac{R_x}{X_x} = \omega C_x R_x$$

Also, D is the reciprocal of the quality factor Q, i.e. D = 1/Q. D indicates the quality of the capacitor.

Commercial units measure from 100 pf – 1 μf with ± 2% accuracy. The dial of C_3 is graduated in terms of direct readings for C_x, if the resistance ratio is maintained at a fixed value.
This Schering Bridge is widely used for testing small capacitors at low voltages with very high precision.

The lower junction of the bridge is grounded. At the frequency normally used on this bridge, the reactances of capacitor C_3 and C_x are much higher than the resistances of R_1 and R_2. Hence, most of the voltage drops across C_3 and C_x and very little across R_1 and R_2. Hence if the junction of R_1 and R_2 is grounded, the detector is effectively at ground potential. This reduces any stray-capacitance effect, and makes the bridge more stable.

Wien Bridge Circuit Diagram:

The Wien Bridge Circuit Diagram shown in Fig. 11.27 has a series RC combination in one arm and a parallel combination in the adjoining arm. Wien's bridge in its basic form, is designed to measure frequency. It can also be used for the measurement of an unknown capacitor with great accuracy.

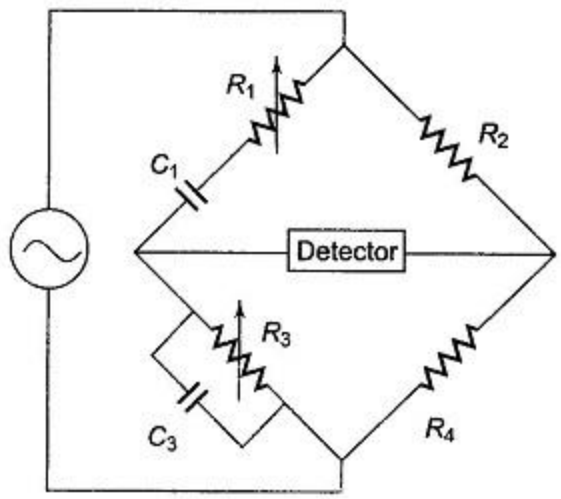

Fig. 11.27 Wien's Bridge

The impedance of one arm is

$$Z_1 = R_1 - j/\omega C_1.$$

The admittance of the parallel arm is

$$Y_3 = 1/R_3 + j\,\omega\,C_3.$$

Using the bridge balance equation,

we have

$$Z_1\,Z_4 = Z_2\,Z_3.$$

Therefore,

$$Z_1\,Z_4 = Z_2/Y_3, \text{ i.e. } Z_2 = Z_1\,Z_4\,Y_3.$$

$$\therefore \qquad R_2 = R_4\left(R_1 - \frac{j}{\omega C_1}\right)\left(\frac{1}{R_3} + j\omega C_3\right)$$

$$R_2 = \frac{R_1 R_4}{R_3} - \frac{j R_4}{\omega C_1 R_3} + j\,\omega\,C_3\,R_1\,R_4 + \frac{C_3 R_4}{C_1}$$

$$R_2 = \left(\frac{R_1 R_4}{R_3} + \frac{C_3 R_4}{C_1}\right) - j\left(\frac{R_4}{\omega C_1 R_3} - \omega C_3 R_1 R_4\right)$$

Equating the real and imaginary terms we have

$$R_2 = \frac{R_1 R_4}{R_3} + \frac{C_3 R_4}{C_1} \text{ and } \frac{R_4}{\omega C_1 R_3} - \omega\,C_3\,R_1\,R_4 = 0$$

Therefore

$$\frac{R_2}{R_4} = \frac{R_1}{R_3} + \frac{C_3}{C_1} \qquad (11.21)$$

and

$$\frac{1}{\omega C_1 R_3} = \omega C_3 R_1 \qquad (11.22)$$

$$\therefore \qquad \omega^2 = \frac{1}{C_1 R_1 R_3 C_3}$$

$$\omega = \frac{1}{\sqrt{C_1 R_1 C_3 R_3}}$$

as

$$\omega = 2\pi f$$

$$\therefore \qquad f = \frac{1}{2\pi\sqrt{C_1 R_1 C_3 R_3}} \qquad (11.23)$$

The two conditions for bridge balance, (11.21) and (11.23), result in an expression determining the required resistance ratio R_2/R_4 and another expression determining the frequency of the applied voltage. If we satisfy Eq. (11.21) and also excite the bridge with the frequency of Eq. (11.23), the bridge will be balanced.

In most Wien Bridge Circuit Diagram, the components are chosen such that $R_1 = R_3 = R$ and $C_1 = C_3 = C$. Equation (11.21) therefore reduces to $R_2/R_4 = 2$ and Eq. (11.23) to $f = ½\pi RC$, which is the general equation for the frequency of the bridge circuit.

The bridge is used for measuring frequency in the audio range. Resistances R_1 and R_3 can be ganged together to have identical values. Capacitors C_1 and C_3 are normally of fixed values.

The audio range is normally divided into 20 – 200 – 2 k – 20 kHz ranges. In this case, the resistances can be used for range changing and capacitors C_1 and C_3 for fine frequency control within the range. The Wien Bridge Circuit Diagram can also be used for measuring capacitances. In that case, the frequency of operation must be known.

The bridge is also used in a harmonic distortion analyzer, as a Notch filter, and in audio frequency and radio frequency oscillators as a frequency determining element.

An accuracy of 0.5% – 1% can be readily obtained using this bridge. Because it is frequency sensitive, it is difficult to balance unless the waveform of the applied voltage is purely sinusoidal.

Wheatstone Bridge Diagram:

A Wheatstone Bridge diagram in its simplest form consists of a network of four resistance arms forming a closed circuit, with a dc source of current applied to two opposite junctions and a current detector connected to the other two junctions, as shown in Fig. 11.1.

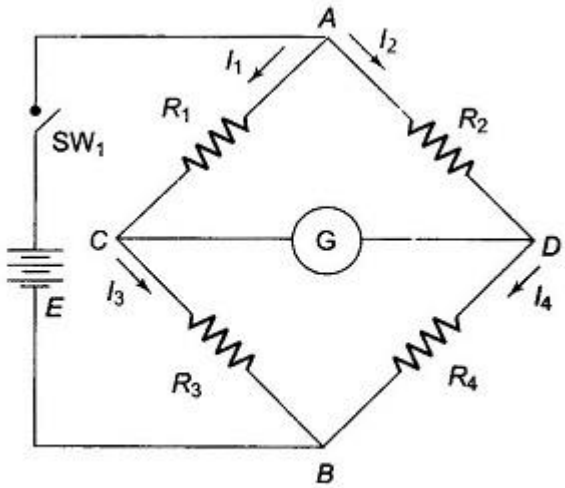

Fig. 11.1 Wheatstone's Bridge

Wheatstone Bridge diagram are extensively used for measuring component values such as R, L and C. Since the bridge circuit merely compares the value of an unknown component with that of an accurately known component (a standard), its measurement accuracy can be very high. This is because the readout of this comparison is based on the null indication at bridge balance, and is essentially independent of the characteristics of the null detector. The measurement accuracy is therefore directly related to the accuracy of the bridge component and not to that of the null indicator used.

The basic dc bridge is used for accurate measurement of resistance and is called Wheatstone's bridge.

Wheatstone Bridge Circuit (Measurement of Resistance):

Wheatstone's bridge is the most accurate method available for measuring resistances and is popular for laboratory use. The circuit

diagram of a typical Wheatstone Bridge diagram is given in Fig. 11.1. The source of emf and switch is connected to points A and B, while a sensitive current indicating meter, the galvanometer, is connected to points C and D. The galvanometer is a sensitive microammeter, with a zero centre scale. When there is no current through the meter, the galvanometer pointer rests at 0, i.e. mid scale. Current in one direction causes the pointer to deflect on one side and current in the opposite direction to the other side.

When SW_1 is closed, current flows and divides into the two arms at point A, i.e. I_1 and I_2. The bridge is balanced when there is no current through the galvanometer, or when the potential difference at points C and D is equal, i.e. the potential across the galvanometer is zero.

To obtain the bridge balance equation, we have from the Fig. 11.1.

$$I_1 R_1 = I_2 R_2 \qquad (11.1)$$

For the galvanometer current to be zero, the following conditions should be satisfied.

$$I_1 = I_3 = \frac{E}{R_1 + R_3} \qquad (11.2)$$

$$I_2 = I_4 = \frac{E}{R_2 + R_4} \qquad (11.3)$$

Substituting in Eq. (11.1)

$$\frac{E \times R_1}{R_1 + R_3} = \frac{E \times R_2}{R_2 + R_4}$$

$$R_1 \times (R_2 + R_4) = (R_1 + R_3) \times R_2$$

$$R_1 R_2 + R_1 R_4 = R_1 R_2 + R_3 R_2$$

$$R_4 = \frac{R_2 R_3}{R_1}$$

This is the equation for the bridge to be balanced.

In a practical Wheatstone Bridge diagram, at least one of the resistance is made adjustable, to permit balancing. When the bridge is balanced, the unknown resistance (normally connected at R_4) may be determined from the setting of the adjustable resistor, which is called a standard resistor because it is a precision device having very small tolerance.

Hence

$$R_x = \frac{R_2 R_3}{R_1} \qquad (11.4)$$

Sensitivity of a Wheatstone Bridge:

When the bridge is in an unbalanced condition, current flows through the galvanometer, causing a deflection of its pointer. The amount of deflection is a function of the sensitivity of the galvanometer. Sensitivity can be thought of as deflection per unit current. A more sensitive galvanometer deflects by a greater amount for the same current. Deflection may be expressed in linear or angular units of measure, and sensitivity can be expressed in units of S = mm/μA or degree/μA or radians/μA.

Therefore it follows that the total deflection D is D = S x I, where S is defined above and I is the current in microamperes.

Unbalanced Wheatstone's Bridge:

To determine the amount of deflection that would result for a particular degree/ of unbalance, general circuit analysis can be applied, but we shall use Thevenin's theorem.

Since we are interested in determining the current through the galvanometer, we wish to find the Thevenin's equivalent, as seen by the galvanometer.

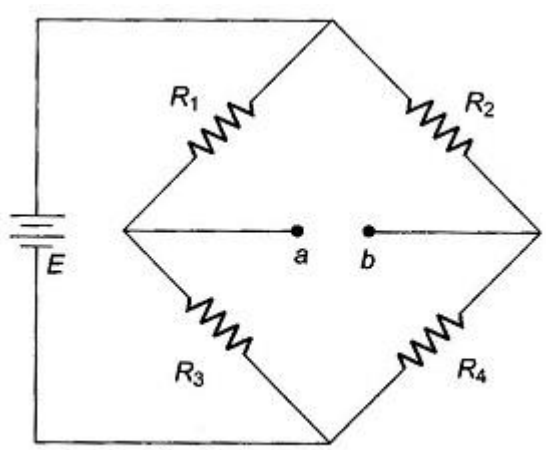

Fig. 11.2 Unbalanced Wheatstone's Bridge

Thevenin's equivalent voltage is found by disconnecting the galvanometer from the Wheatstone Bridge diagram, as shown in Fig. 11.2, and determining the open-circuit voltage between terminals a and b.

Applying the voltage divider equation, the voltage at point a can be determined as follows

$$E_a = \frac{E \times R_3}{R_1 + R_3} \quad \text{and at point } b, \quad E_b = \frac{E \times R_4}{R_2 + R_4}$$

Therefore, the voltage between a and b is the difference between E_a and E_b, which represents Thevenin's equivalent voltage.

$$E_{th} = E_{ab} = E_a - E_b = \frac{E \times R_3}{R_1 + R_3} - \frac{E \times R_4}{R_2 + R_4}$$

Therefore

$$E_{ab} = E\left(\frac{R_3}{R_1 + R_3} - \frac{R_4}{R_2 + R_4}\right)$$

Thevenin's equivalent resistance can be determined by replacing the voltage source E with its internal impedance or otherwise short-circuited and calculating the resistance looking into terminals a and b. Since the internal resistance is assumed to be very low, we treat it as 0 Ω. Thevenin's equivalent resistance circuit is shown in Fig. 11.3.

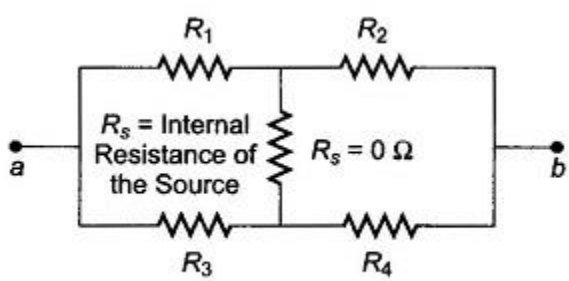

Fig. 11.3 Thévenin's Resistance

The equivalent resistance of the circuit is $R_1//R_3$ in series with $R_2//R_4$ i.e. $R_1//R_3 + R_2//R_4$.

$$\therefore \qquad R_{th} = \frac{R_1 R_3}{R_1 + R_3} + \frac{R_2 R_4}{R_2 + R_4}$$

Therefore, Thevenin's equivalent circuit is given in Fig. 11.4. Thevenin's equivalent circuit for the bridge, as seen looking back at terminals a and b in Fig. 11.2, is shown in Fig. 11.4.

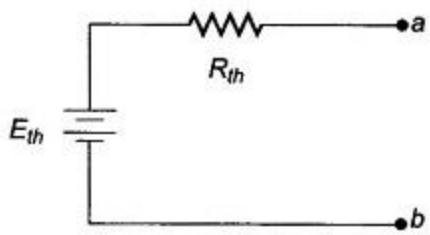

Fig. 11.4 Thévenin's Equivalent

If a galvanometer is connected across the terminals a and b of Fig.11.2, or its Thevenin equivalent Fig. 11.4 it will experience the same deflection at the output of the bridge. The magnitude of current is limited by both Thevenin's equivalent resistance and any resistance connected between a and b. The resistance between a and b consists only of the galvanometer resistance R_g. The deflection current in the galvanometer is therefore given by

$$I_g = \frac{E_{th}}{R_{th} + R_g} \qquad (11.5)$$

Slightly Unbalanced Wheatstone's Bridge:

If three of the four resistor in a bridge are equal to R and the fourth differs by 5% or less, we can develop an approximate but accurate expression for Thevenin's equivalent voltage and resistance.

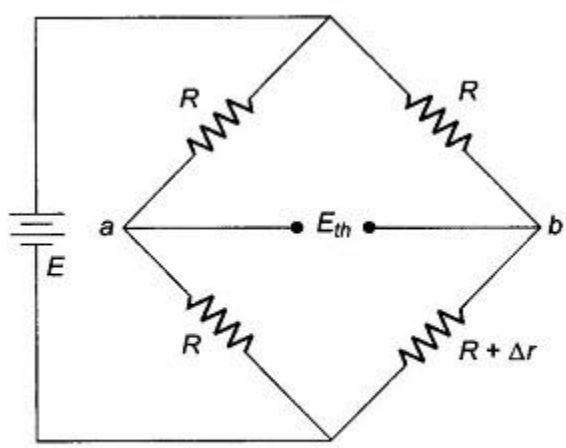

Fig. 11.7 Slightly Unbalanced Wheatstone's Bridge

Consider the circuit in Fig. 11.7.

The voltage at point a is

$$E_a = \frac{E \times R}{R + R} = \frac{E \times R}{2R} = \frac{E}{2}$$

The voltage at point b is

$$E_b = \frac{R + \Delta r \times E}{R + R + \Delta r} = \frac{E(R + \Delta r)}{2R + \Delta r}$$

Thevenin's equivalent voltage between a and b is the difference between these voltages.

Therefore

$$E_{th} = E_a - E_b = E\left(\frac{(R + \Delta r)}{2R + \Delta r} - \frac{1}{2}\right)$$

$$= E\left(\frac{2(R + \Delta r) - (2R + \Delta r)}{2(2R + \Delta r)}\right)$$

$$= E\left(\frac{2R + 2\Delta r - 2R - \Delta r}{4R + 2\Delta r}\right)$$

$$= E\left(\frac{\Delta r}{4R + 2\Delta r}\right)$$

If Δ r is 5% of R or less, Δ r in the denominator can be neglected without introducing appreciable error. Therefore, Thevenin's voltage is

$$E_{th} = \frac{E \times \Delta r}{4R} = E\left(\frac{\Delta r}{4R}\right)$$

The equivalent resistance can be calculated by replacing the voltage source with its internal impedance (for all practical purpose short-circuit). The Thevenin's equivalent resistance is given by

$$R_{th} = \frac{R \times R}{R + R} + \frac{R(R + \Delta r)}{R + R + \Delta r}$$

$$= \frac{R}{2} + \frac{R(R + \Delta r)}{2R + \Delta r}$$

Again, if Δr is small compared to R, Δ r can be neglected. Therefore,

$$R_{th} = \frac{R}{2} + \frac{R}{2} = R$$

Using these approximations, the Thevenin's equivalent circuit is as shown in Fig. 11.8. These approximate equations are about 98% accurate if Δr ≤ 0.05 R.

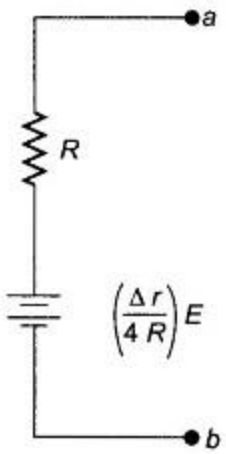

Fig. 11.8 Thévenin's Equivalent of a Slightly Unbalanced Wheatstone's Bridge

Application of Wheatstone's Bridge:

A Wheatstone bridge may be used to measure the dc resistance of various types of wire, either for the purpose of quality control of the wire itself, or of some assembly in which it is used. For example, the resistance of motor windings, transformers, solenoids, and relay coils can be measured.

Wheatstone Bridge diagram is also used extensively by telephone companies and others to locate cable faults. The fault may be two lines shorted together, or a single line shorted to ground.

Limitations of Wheatstone's Bridge:

For low resistance measurement, the resistance of the leads and contacts becomes significant and introduces an error. This can be eliminated by Kelvin's Double bridge.

For high resistance measurements, the resistance presented by the bridge becomes so large that the galvanometer is insensitive to imbalance. Therefore, a power supply has to replace the battery and a dc VTVM replaces the galvanometer. In the case of high resistance measurements in mega ohms, the Wheatstone's bridge cannot be used.

Another difficulty in Wheatstone Bridge diagram is the change in resistance of the bridge arms due to the heating effect of current through the resistance. The rise in temperature causes a change in the value of the resistance, and excessive current may cause a permanent change in value.

Kelvins Bridge and Kelvins Double Bridge:

When the resistance to be measured is of the order of magnitude of bridge contact and lead resistance, a modified form of Wheatstone's bridge, the Kelvins Bridge is employed.

Kelvins Bridge is a modification of Wheatstone's bridge and is used to measure values of resistance below 1 Ω. In low resistance measurement, the resistance of the leads connecting the unknown resistance to the terminal of the bridge circuit may affect the measurement.

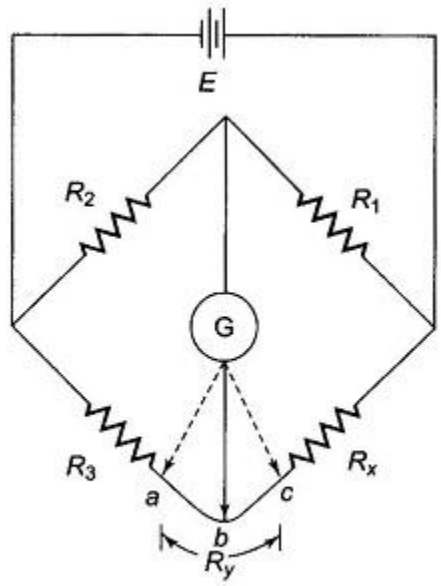

Fig. 11.10 Kelvin's Bridge

Consider the circuit in Fig. 11.10, where R_y represents the resistance of the connecting leads from R_3 to R_x (unknown resistance). The galvanometer can be connected either to point c or to point a. When it is connected to point a, the resistance R_y, of the connecting lead is added to the unknown resistance R_x, resulting in too high indication for R_x. When the connection is made to point c, R_y is added to the bridge arm R_3 and resulting measurement of R_x is lower than the actual value, because now the actual value of R_3 is higher than its nominal value by the resistance R_y. If the galvanometer is connected to point b, in between points c and a, in such a way that the ratio of the resistance from c to b and that from a to b equals the ratio of resistances R_1 and R_2, then

$$\frac{R_{cb}}{R_{ab}} = \frac{R_1}{R_2} \tag{11.6}$$

and the usual balance equations for the bridge give the relationship

$$(R_x + R_{cb}) = \frac{R_1}{R_2}\,(R_3 + R_{ab}) \tag{11.7}$$

but

$$R_{ab} + R_{cb} = R_y \text{ and } \frac{R_{cb}}{R_{ab}} = \frac{R_1}{R_2}$$

$$\frac{R_{cb}}{R_{ab}} + 1 = \frac{R_1}{R_2} + 1$$

$$\frac{R_{cb} + R_{ab}}{R_{ab}} = \frac{R_1 + R_2}{R_2}$$

i.e.

$$\frac{R_y}{R_{ab}} = \frac{R_1 + R_2}{R_2}$$

Therefore

$$R_{ab} = \frac{R_2\,R_y}{R_1 + R_2} \quad \text{and as} \quad R_{ab} + R_{cb} = R_y$$

$$\therefore \qquad R_{cb} = R_y - R_{ab} = R_y - \frac{R_2\,R_y}{R_1 + R_2}$$

$$\therefore \qquad R_{cb} = \frac{R_1\,R_y + R_2\,R_y - R_2\,R_y}{R_1 + R_2} = \frac{R_1\,R_y}{R_1 + R_2}$$

Substituting for R_{ab} and R_{cb} in Eq. (11.7), we have

$$R_x + \frac{R_1\,R_y}{R_1 + R_2} = \frac{R_1}{R_2}\left(R_3 + \frac{R_2\,R_y}{R_1 + R_2}\right)$$

$$R_x + \frac{R_1\,R_y}{R_1 + R_2} = \frac{R_1\,R_3}{R_2} + \frac{R_1\,R_2\,R_y}{R_2\,(R_1 + R_2)}$$

Hence

$$R_x = \frac{R_1 R_3}{R_2} \tag{11.8}$$

Equation (11.8) is the usual Wheatstone's balance equation and it indicates that the effect of the resistance of the connecting leads from point a to point c has been eliminated by connecting the galvanometer to an intermediate position, b.

The above principle forms the basis of the construction of Kelvin's Double Bridge, popularly known as Kelvin's Bridge. It is a Double bridge because it incorporates a second set of ratio arms. Figure 11.11 shows a schematic diagram of Kelvin's double bridge.

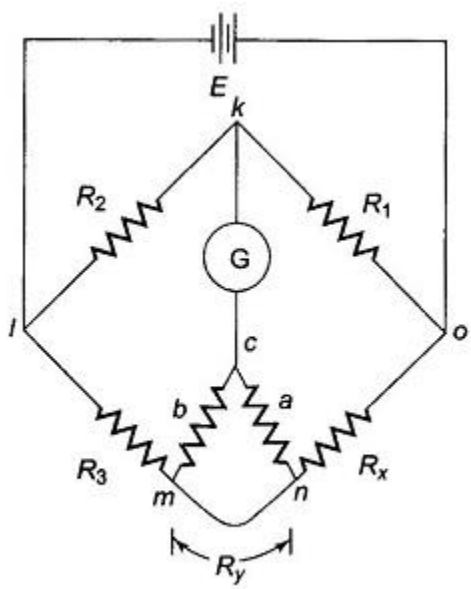

Fig. 11.11 Kelvin's Double Bridge

The second set of arms, a and b, connect the galvanometer to a point c at the appropriate potential between m and n connection, i.e. R_y. The ratio of the resistances of arms a and b is the same as the ratio of R_1 and R_2. The galvanometer indication is zero when the potentials at k and c are equal.

$$\therefore \qquad E_{lk} = E_{lmc}$$

But

$$E_{lk} = \frac{R_2}{R_1 + R_2} \times E \tag{11.9}$$

and

$$E = I\left(R_3 + R_x + \frac{(a+b)R_y}{a+b+R_y}\right)$$

Substituting for E in Eq.(11.9),

We get

$$E_{lk} = \frac{R_2}{R_1 + R_2} \times I\left(R_3 + R_x + \frac{(a+b)R_y}{a+b+R_y}\right) \tag{11.10}$$

Similarly,

$$E_{lmc} = I\left(R_3 + \frac{b}{a+b}\left[\frac{(a+b)R_y}{a+b+R_y}\right]\right) \tag{11.11}$$

But

$$E_{lk} = E_{lmc}$$

i.e.

$$\frac{IR_2}{R_1 + R_2}\left(R_3 + R_x + \frac{(a+b)R_y}{a+b+R_y}\right) = I\left[R_3 + \frac{b}{a+b}\left\{\frac{(a+b)R_y}{a+b+R_y}\right\}\right]$$

$$\therefore \quad R_3 + R_x + \frac{(a+b)R_y}{a+b+R_y} = \frac{R_1 + R_2}{R_2}\left(R_3 + \frac{bR_y}{a+b+R_y}\right)$$

$$\therefore \quad R_3 + R_x + \frac{(a+b)R_y}{a+b+R_y} = \left(\frac{R_1}{R_2} + 1\right)\left(R_3 + \frac{bR_y}{a+b+R_y}\right)$$

$$R_x + \frac{(a+b)R_y}{a+b+R_y} + R_3 = \frac{R_1 R_3}{R_2} + R_3 + \frac{b R_1 R_y}{R_2 (a+b+R_y)} + \frac{b R_y}{a+b+R_y}$$

$$R_x = \frac{R_1 R_3}{R_2} + \frac{b R_1 R_y}{R_2 (a+b+R_y)} + \frac{b R_y}{a+b+R_y} - \frac{(a+b)R_y}{a+b+R_y}$$

$$R_x = \frac{R_1 R_3}{R_2} + \frac{b R_1 R_y}{R_2 (a+b+R_y)} + \frac{b R_y - aR_y - bR_y}{a+b+R_y}$$

$$R_x = \frac{R_1 R_3}{R_2} + \frac{b R_1 R_y}{R_2 (a+b+R_y)} - \frac{aR_y}{a+b+R_y}$$

$$R_x = \frac{R_1 R_3}{R_2} + \frac{b R_y}{(a+b+R_y)} \left(\frac{R_1}{R_2} - \frac{a}{b} \right)$$

But

$$\frac{R_1}{R_2} = \frac{a}{b}$$

Therefore,

$$R_x = \frac{R_1 R_3}{R_2}$$

This is the usual equation for Kelvins Bridge theory. It indicates that the resistance of the connecting lead R_y, has no effect on the measurement, provided that the ratios of the resistances of the two sets of ratio arms are equal. In a typical Kelvins Bridge theory the range of a resistance covered is 1 – 0.00001 Ω (10 μohm) with an accuracy of ± 0.05% to ± 0.2%.

Practical Kelvins Double Bridge:

Figure 11.13 shows a commercial Kelvin's bridge capable of measuring resistances from 10 – 0.00001 Ω**.**

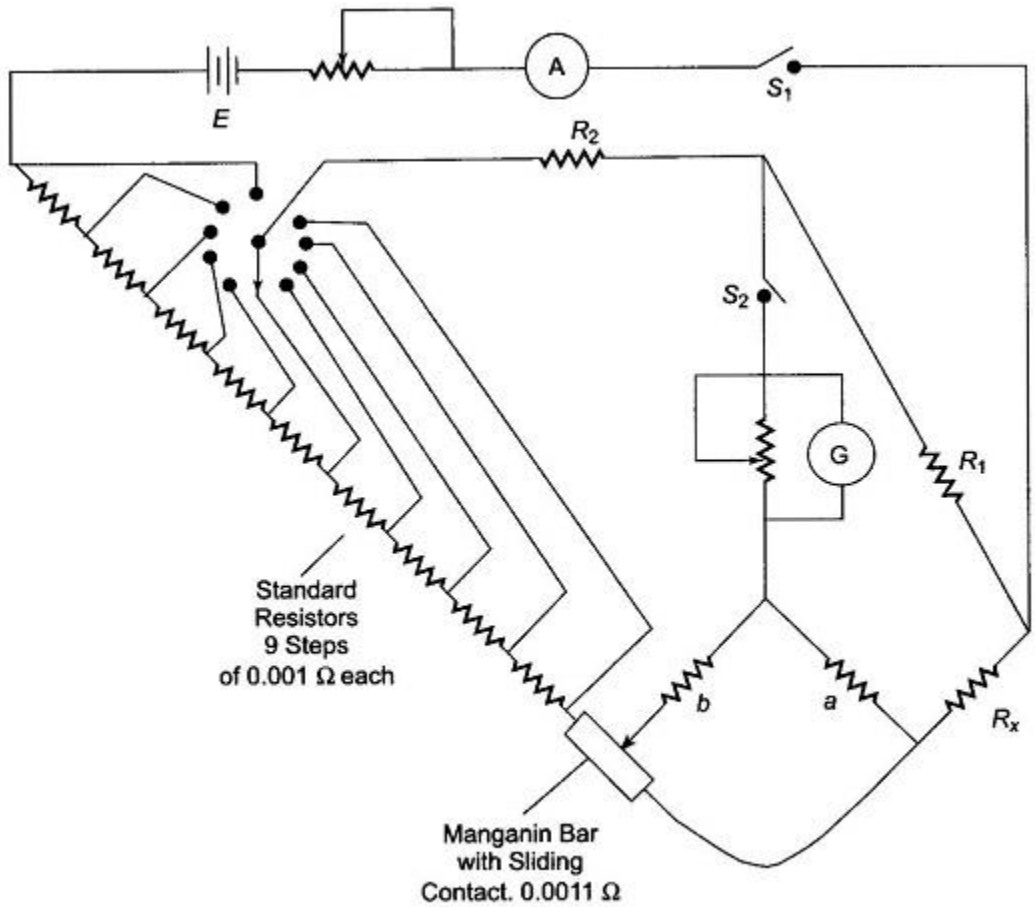

Fig. 11.13 Practical Kelvin's Bridge

Contact potential drops in the circuit may cause large errors. This effect is reduced by varying a standard resistance consisting of nine steps of 0.001 Ω each, plus a calibrated manganin bar of 0.0011 Ω with a sliding contact. When both contacts are switched to select the suitable value of standard resistance, the voltage drop between the ratio arm connection points is changed, but the total resistance around the battery circuit is unchanged.

This arrangement places any contact resistance in series with the relatively high resistance value of the ratio arms, rendering the contact resistance effect negligible. The ratio R_1/R_2 is selected (as given in Fig. 11.13) such that a relatively large part of the standard resistance is used and hence R_x is determined to the largest possible number of significant figures. Therefore, measurement accuracy improves.

Precautions to be Taken When Using a Bridge:

Assuming that a suitable method of measurement has been selected and that the source and detector are given, there are some precautions which must be observed to obtain accurate readings.

The leads should be carefully laid out in such a way that no loops or long lengths enclosing magnetic flux are produced, with consequent stray inductance errors.

With a large L, the self-capacitance of the leads is more important than their inductance, so they should be spaced relatively far apart.

In measuring a capacitor, it is important to keep the lead capacitance as low as possible. For this reason the leads should not be too close together and should be made of fine wire.

In very precise inductive and capacitances measurements, leads are encased in metal tubes to shield them from mutual electromagnetic action, and are used or designed to completely shield the bridge.